IPSD6-S1NC60-A8

Inductive Proximity Switch
3-Wire DC
Sensing range: *Standard*

Mind O≠0, I≠I≠1, S≠5, B≠8.

Housing size	⌀ 6.5 mm
Mounting	flush
Sensing distance S_n	1 mm
Operating voltage	10...30 V_{DC}
Reverse polarity protection	built-in
Current consumption	<8 mA
Current load capability	200 mA
Output function	⅄ normally closed
Output polarity	NPN
Short circuit protection	built-in, self-resetting
Voltage drop	<1.5 V @ 200 mA
Switching frequency	2000 Hz
Reduction factors	Alu 0.45 · Brs 0.50 · SS 0.85
Operating temperature	−20...+70 °C · −3...+159 °F
Protection class	IP67
Sensing face material	PBT
Housing material	SS 1.4301 (SAE 304)
Switching indicator	built-in
Connection	male connector M8
Complies with	CE, RoHS

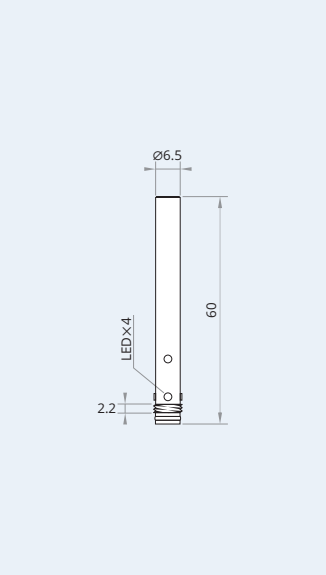

25 months **Warranty** Our products are manufactured to stringent ISO 9001 European standards to ensure that our customers only receive the best quality.

Wiring diagram

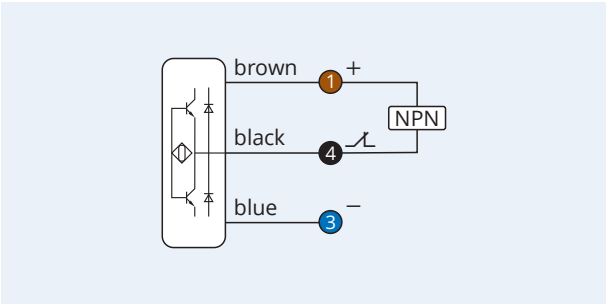

Clearance for parallel mounting

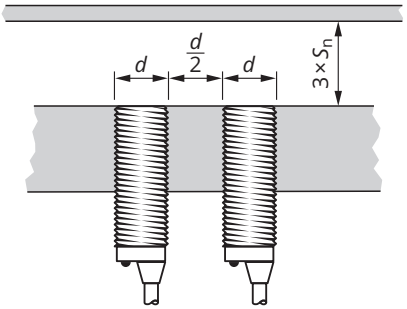

Pinout

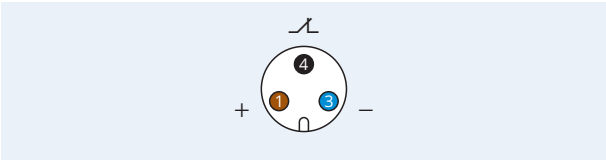

Clearance for opposing mounting

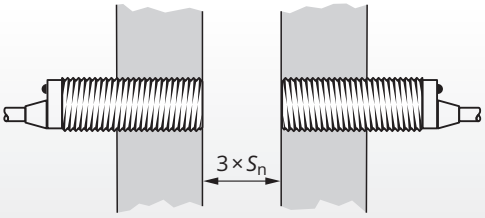

Caution! This device shall not be used if the safety of persons rely on its faultless function.

XECRO reserves the right to make minor changes without prior notification.